iOP-W1900 Mounting Method

UNIT : mm
1mm = 0.03937 inch

Universal open frame mounting

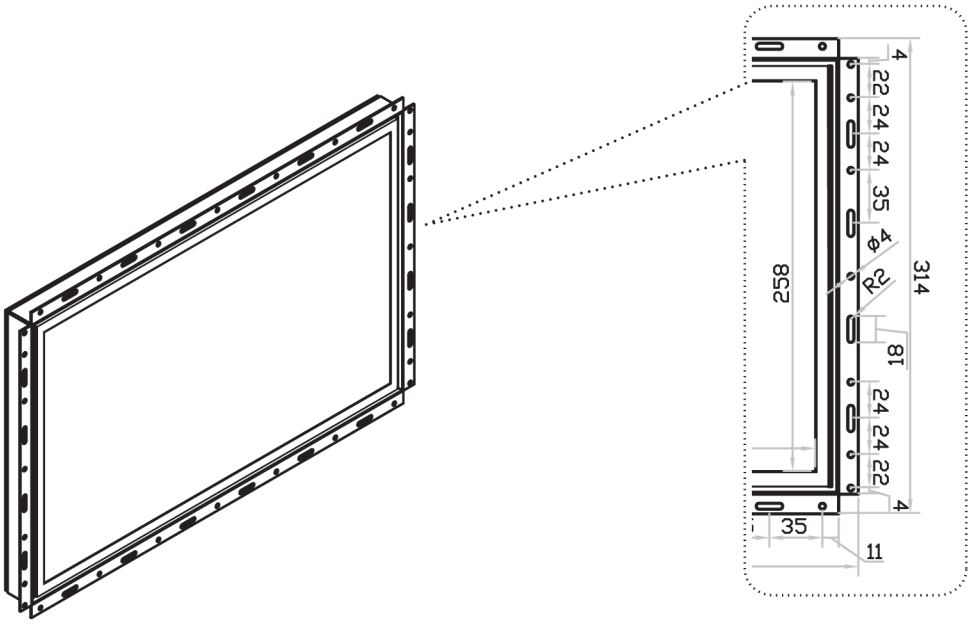

Remarks

- Hardware for fixing the LCD display is not provided

100mm VESA standard

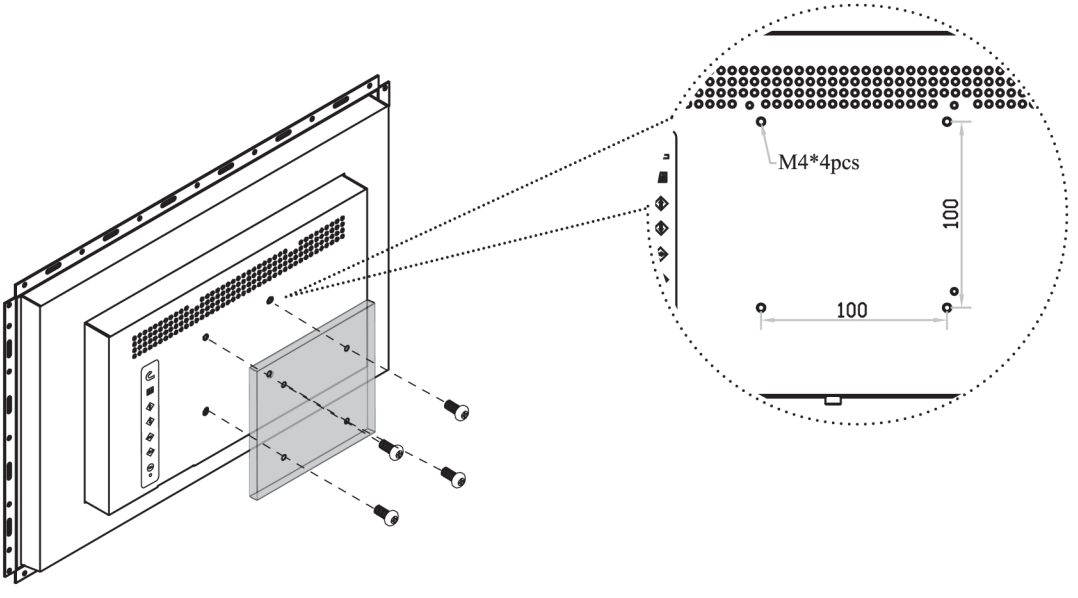

Remarks

- Hardware and M4*4 pcs for VESA mounting is not provided