| Specifications | |
|---|---|
| Model Name | WPMW1900M3 |
| Viewable Size image | 19"Wide(16:10) |
| Active Display Area (mm) | 408.2(H)x255.2(V) |
| Pixel Pitch(mm) | 0.284X0.284 |
| Number of Pixels | 1440x900 |
| Contrast Ratio | 1000:1(typ.) |
| Display Color | 16.7M(6bit/FRC) |
| Brightness(cd/m2) | 250(typ.) |
| Viewing Angle(CR>=10) | -85~85(H);-80~80(V) |
| Synchronization Range (Horizontal / Vertical ) | 31.5~60.0KHz/60~75Hz |
| Recommended Resolution | 1440x900@ 60Hz |
| Signal Connector | 15 pin D-sub |
| Power Source | 12V DC in, with External AC to DC Adapter (100~240V AC) |
| Power Consumption | 15W typical, normal operation |
| Power Management | VESA DPMS Compliant |
| Plug & Play | VESADDC 1/2B |
| Optional Video Input | S-Video, Composite |
| Optional DVI Input | No |
| Optional Touch Screen | Resistive |

**Remarks**: WPMW1900M3 series= VGA input only
WPMW1900M3AV series= VGA+Video Input

## MECHANICAL DRAWING

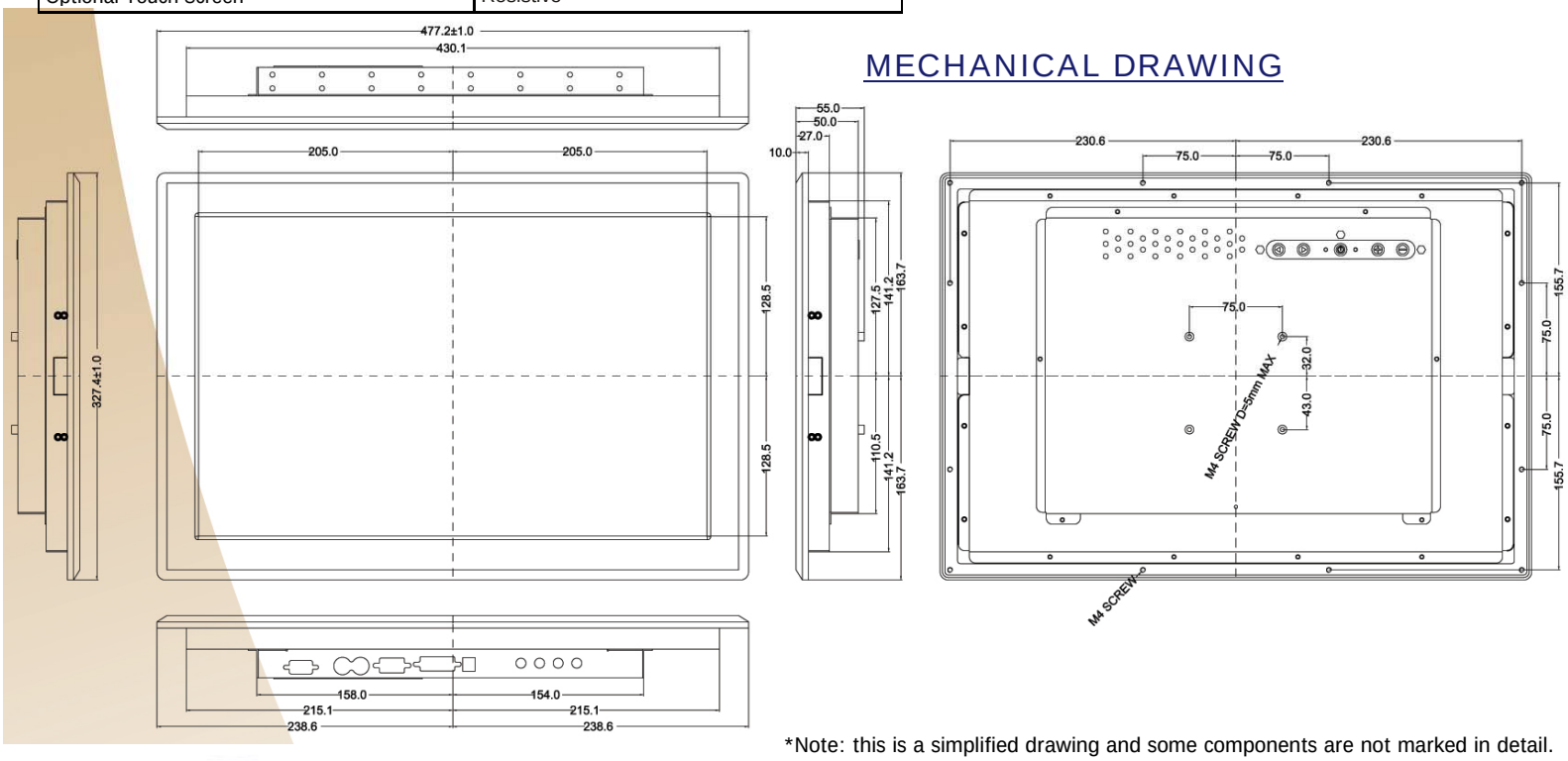


*Note: this is a simplified drawing and some components are not marked in detail.
Please contact our sales representative if you need further product information.

i-Tech Company LLC
TOLL FREE: (888) 483-2418 • EMAIL: info@itechlcd.com • WEB: www.iTechLCD.com