Front IP65 Flush Mount Dust and Waterproof LCD

Front IP65 Flush Mount 21.5" Wide LCD monitor, 1920 x 1080, LED 1000 nits, VGA input

(Model: EFMW2150HB2-IP)

Features:

- Modular mechanism design provides flexible product configuration and easy maintenance.
- Optional to built-in touch screen for interactive application.
- Available with auto-brightness sensor offers application in day and night.
- IP65 Compliant
- Able to protect against water jets
- Complete custom design/solution for OEM customers

Rugged Completely Sealed IP65/NEMA4 Flush Mount LCD Monitor

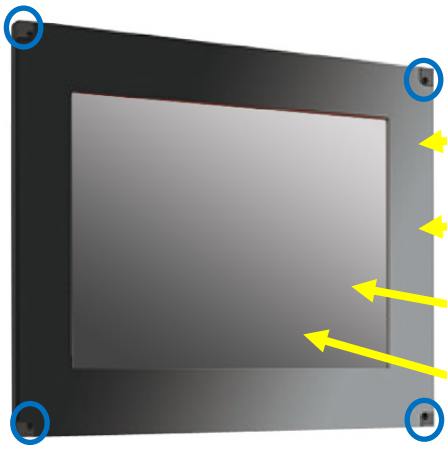

FLUSH MOUNT / FRONT MOUNTING

Water Proof Solution, Front IP NEMA4 Rating

Aluminum Housing Flush Mount Design

AR Glass Protective Glass at front

Optional High Brightness and Touch screen

*** All Connectors are facing downward**

i-Tech Company LLC
TOLL FREE: (888) 483-2418 • EMAIL: info@itechlcd.com • WEB: www.iTechLCD.com

Specification:

Panel	Cell Type / Glass Surface	TFT LCD / Black Anti-Glare, low refection coating	
	Aspect Ratio / Size	Wide / 21.5" viewable diagonal area	
	Active Area / Pixel Pitch	476.64(H) x 268.11(V) mm / 0.248(H) x 0.248(V) mm	
	Native Resolution / Colors	1920(H) x 1080(V) / 16.7M	
	Brightness / Contrast	1000 cd/m^2 (typ) / 1000 : 1	
	Response Time	≤ 5 ms	
	Viewing Angle (typical)	H.170° (- 85o ~ + 85o) , V. 160o(- 80o ~ + 80o)	
	Light Source	LED backlight, Long life, 35,000 hrs (typ)	
Input Sources	PC System	Signal	Analog RGB (0.7/1.0 V_{p-p}, 75 ohms)
		Sync	Separate Sync, Composite Sync, Sync On Green
		Frequency	F_h : 30 - 82Khz , F_v : 50 -75Hz
	Audio System	2W speaker x 2	
Input Terminals	1 x VGA (15 Pin Female D-Sub) , 1 x PC Audio (Stereo Headphone Jack) , 1 x DC Power Plug		
Convenient Features	Auto Calibration , Back Light Adjustment , Plug&Play (VESA DDC/CI, DDC 2B)		
	OSD Multi-Languages , Wall Mount Ready (VESA Dimension - please refer to Drawing)		
Power	External AC-to-12VDC power adapter with universal / Auto-Sensing, AC 90 to 260V, 50 / 60 Hz		
Power Consumption	Operation / Power Saving	27 watt , < 1 watt (Support DPMS)	
Operating Condition	Temperature / Humidity	0°C ~ 50°C (32°F ~ 122°F) , 10% ~ 90% (no condensation)	
Storage Condition	Temperature / Humidity	- 20°C ~ 60°C (- 4°F ~ 140°F) , 10% ~ 90% (no condensation)	
Certification		FCC , CE	
Dimensions	Physical	Please refer to Drawing	
	Carton	W x H x D = TBD	
Weight	N.W. / G.W.	8 Kgs / 9 Kgs	
Container Loaded	20ft / 40ft / 40ft HQ	TBD (Sets , By pallet)	

Options	Touch	Video / TV	Enhanced Panel	Others
	Resistive touch	SV + AV	Panel with LED backlight	Digital Signage(Stand alone)
	Capacitive touch	SV + AV + AV Looping	High brightness panel	Networking Digital Signage
	SAW touch	SV + AV + TV	Wide Temperature	Motion Sensor
	Infrared touch		Sunlight Readable	Light Sensor
	Protected glass			Auto-Dimming

Applications:

- Automation
- Batch Processing
- Commercial Broadcast Operations
- Man Machine Interface (MMI) Operation
- Electronic Flight Bag (EFB)
- Food Processing
- GPS Mapping Systems
- Inspection Systems

Mechanical Drawing:

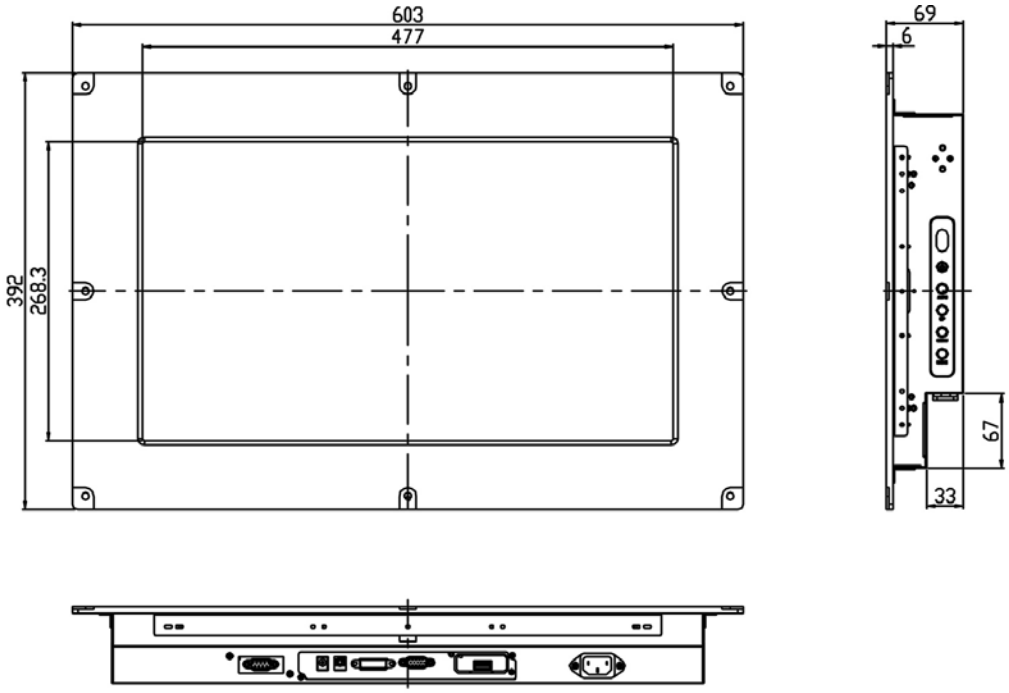

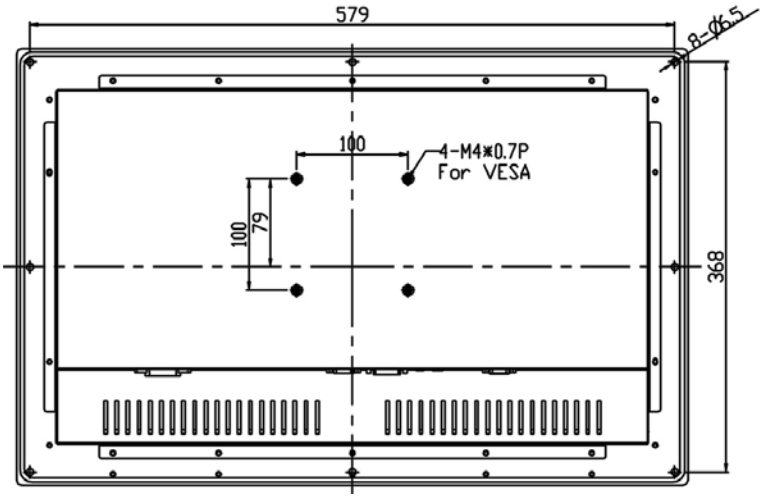

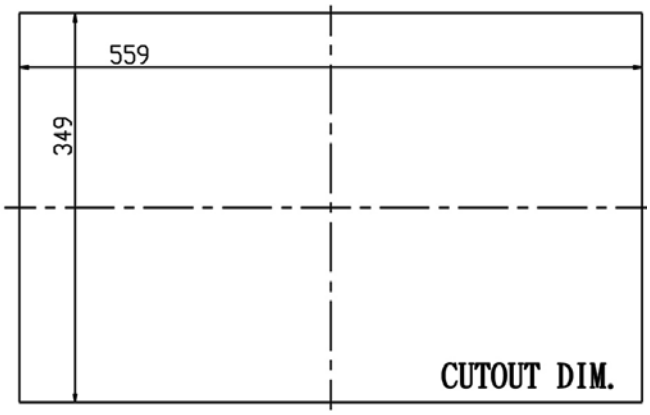

LCD Options:

LED Backlight Options
Introducing LED backlight options for monitors for energy efficiency and a brighter screen.

VIDEO Input Options:
For Video inputs options:
DVI, DVI+HDMI, SVideo+AV, SVideo+AV+DVI, AV+Looping, DVI+AV+Looping, HD-SDI, BNC(PAL/NTSC)

Optical Bonding Options

- Optical Bonding provides the best reduction of ambient light washout of any commercially available enhancement technology.
- Optical Bonding has a lower cost than most other competing technologies.
- Optical Bonding offers superior ruggedization, enhancing the display durability under vibration, shock and other environmental extremes.

RS-232 Remote Control Options
Remote Control Protocol: Command Code to set system

9-36V DC Input Options
iTech offers a selection of DC input from 9V to 36V

Light Sensor and Motion Sensor Options
iTech LCD offers Light and Motion Sensor

Privacy Filter

Front Glass Options:

- Anti Reflective AR Glass 3mm
- Anti Reflective AR Glass 6mm Vandal-Resistance
- Anti Reflective AR Glass 8mm Vandal-Resistance
- Anti Glare AG Glass 3mm