Full IP66 Flush Mount Dust and Waterproof LCD

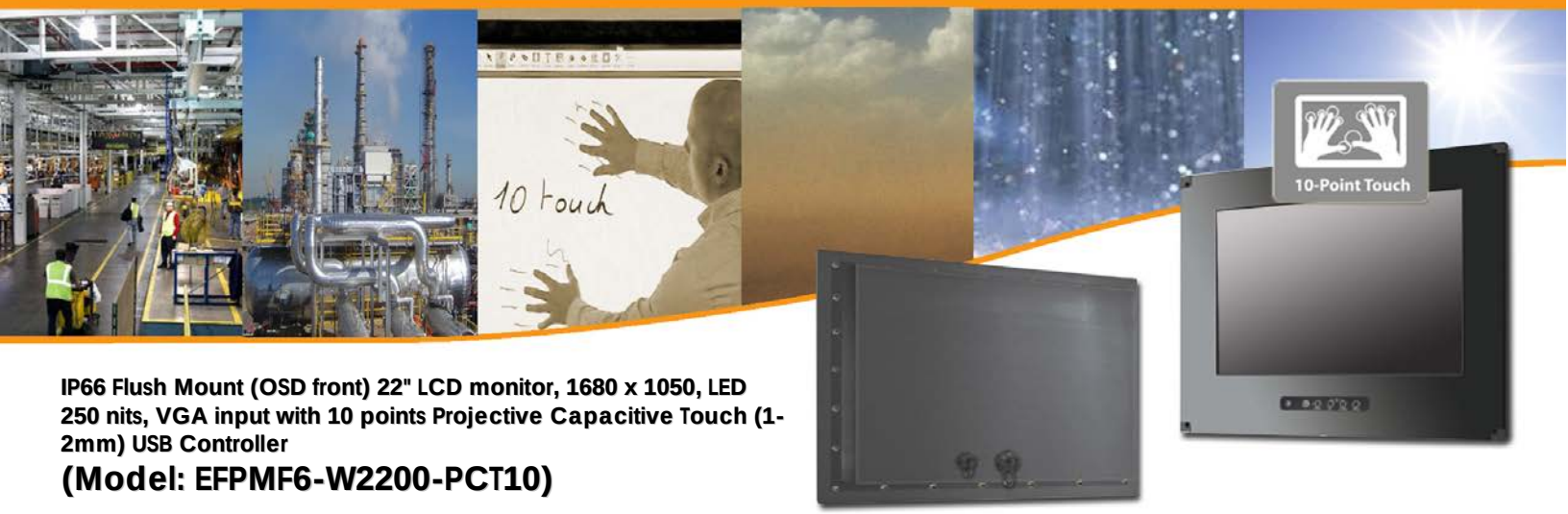

IP66 Flush Mount (OSD front) 22" LCD monitor, 1680 x 1050, LED 250 nits, VGA input with 10 points Projective Capacitive Touch (1-2mm) USB Controller

(Model: EFPMF6-W2200-PCT10)

Features:

- Modular mechanism design provides flexible product configuration and easy maintenance.
- Optional to built-in touch screen for interactive application.
- Available with auto-brightness sensor offers application in day and night.
- IP66 Compliant
- Able to protect against powerful water jets
- Complete custom design/solution for OEM customers

Rugged Completely Sealed IP66/NEMA4X Flush Mount LCD Monitor

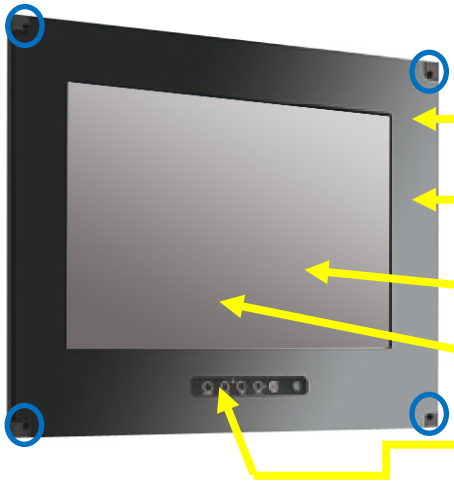

FLUSH MOUNT / FRONT MOUNTING

Water Proof Solution, Full IP NEMA4X Rating front and back

Aluminum Housing Flush Mount Design

AR Glass Protective Glass at front

Optional High Brightness and Touch screen

Front OSD

*** IP66 Water and Dust proof connection for a higher protection**

*** All Connectors are facing backward**

i-Tech Company LLC
TOLL FREE: (888) 483-2418 • EMAIL: info@itechlcd.com • WEB: www.iTechLCD.com

Specification:

Panel	Cell Type / Glass Surface	TFT LCD / Black Anti-Glare, low refection coating	
	Aspect Ratio / Size	Wide / 22" viewable diagonal area	
	Active Area / Pixel Pitch	473.8(H) x 296.1(V) mm / 0.282(H) x 0.282(V) mm	
	Native Resolution / Colors	1680(H) x 1050(V) / 16.7M	
	Brightness / Contrast	250 cd/m^2 (typ) / 1000 : 1	
	Response Time	≤ 5 ms	
	Viewing Angle (typical)	H.170° (- 85o ~ + 85o) , V. 160o(- 80o ~ + 80o)	
	Light Source	LED backlight, Long life, 35,000 hrs (typ)	
Input Sources	PC System	Signal	Analog RGB (0.7/1.0 V_{p-p}, 75 ohms)
		Sync	Separate Sync, Composite Sync, Sync On Green
		Frequency	F_h : 30 - 82Khz , F_v : 50 -75Hz
	Audio System	2W speaker x 2	
Input Terminals	1 x VGA (15 Pin Female D-Sub) , 1 x PC Audio (Stereo Headphone Jack) , 1 x DC Power Plug		
Convenient Features	Auto Calibration , Back Light Adjustment , Plug&Play (VESA DDC/CI, DDC 2B)		
	OSD Multi-Languages , Wall Mount Ready (VESA Dimension - please refer to Drawing)		
Power	External AC-to-12VDC power adapter with universal / Auto-Sensing, AC 90 to 260V, 50 / 60 Hz		
Power Consumption	Operation / Power Saving	24.7 watt , < 1 watt (Support DPMS)	
Operating Condition	Temperature / Humidity	0°C ~ 50°C (32°F ~ 122°F) , 10% ~ 90% (no condensation)	
Storage Condition	Temperature / Humidity	- 20°C ~ 60°C (- 4°F ~ 140°F) , 10% ~ 90% (no condensation)	
Certification		FCC , CE	
Dimensions	Physical	Please refer to Drawing	
	Carton	W x H x D = TBD	
Weight	N.W. / G.W.	9 Kgs / 10.5 Kgs	
Container Loaded	20ft / 40ft / 40ft HQ	TBD (Sets , By pallet)	

Options	Touch	Video / TV	Enhanced Panel	Others
	Resistive touch	SV + AV	Panel with LED backlight	Digital Signage(Stand alone)
	Capacitive touch	SV + AV + AV Looping	High brightness panel	Networking Digital Signage
	SAW touch	SV + AV + TV	Wide Temperature	Motion Sensor
	Infrared touch		Sunlight Readable	Light Sensor
	Protected glass			Auto-Dimming

Applications:

- Automation
- Batch Processing
- Commercial Broadcast Operations
- Man Machine Interface (MMI) Operation
- Electronic Flight Bag (EFB)
- Food Processing
- GPS Mapping Systems
- Inspection Systems

Mechanical Drawing:

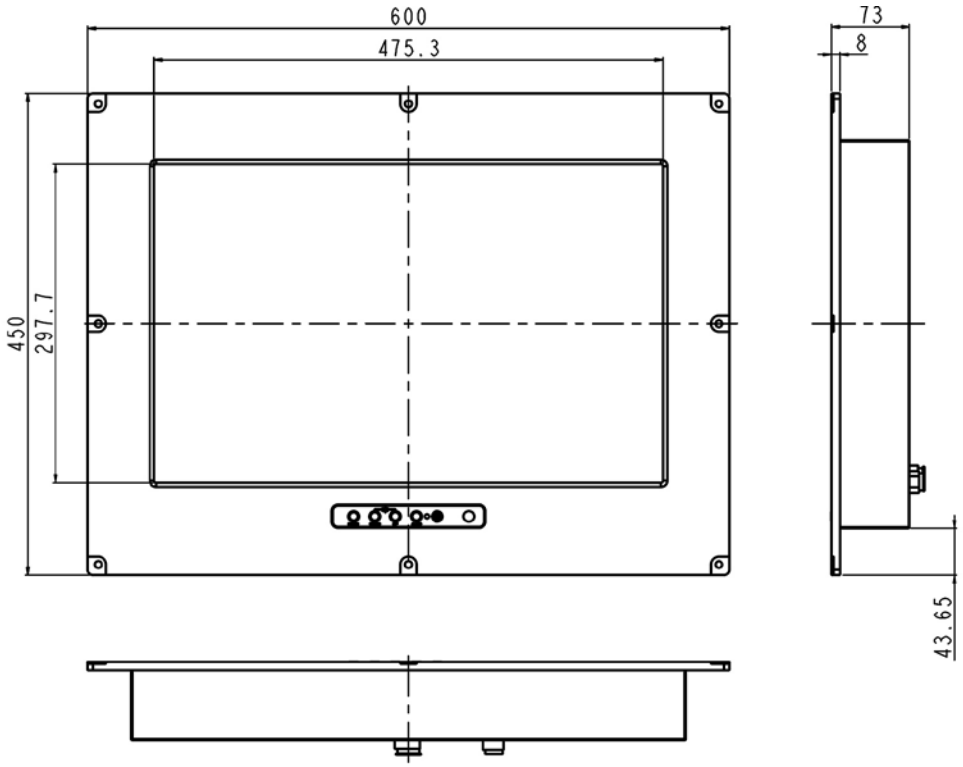

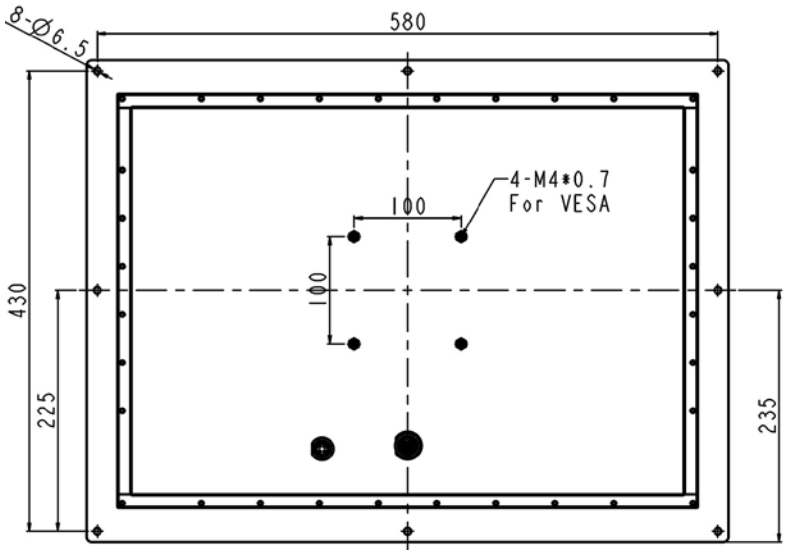

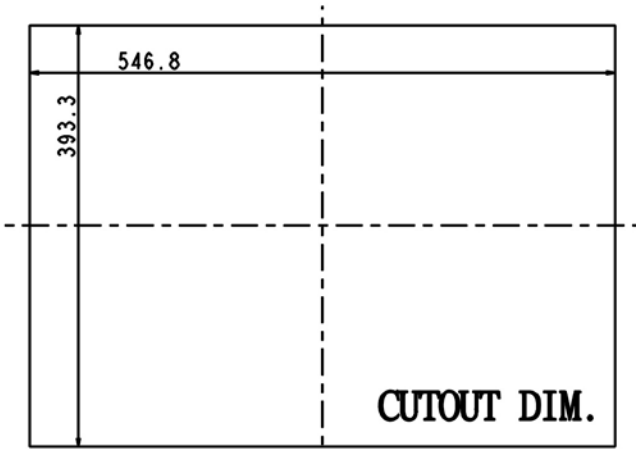

LCD Options:

LED Backlight Options
Introducing LED backlight options for monitors for energy efficiency and a brighter screen.

VIDEO Input Options:
For Video inputs options:
DVI, DVI+HDMI, SVideo+AV, SVideo+AV+DVI, AV+Looping, DVI+AV+Looping, HD-SDI, BNC(PAL/NTSC)

Optical Bonding Options

- Optical Bonding provides the best reduction of ambient light washout of any commercially available enhancement technology.
- Optical Bonding has a lower cost than most other competing technologies.
- Optical Bonding offers superior ruggedization, enhancing the display durability under vibration, shock and other environmental extremes.

RS-232 Remote Control Options
Remote Control Protocol: Command Code to set system

9-36V DC Input Options
iTech offers a selection of DC input from 9V to 36V

Light Sensor and Motion Sensor Options
iTech LCD offers Light and Motion Sensor

Privacy Filter

Front Glass Options:

- Anti Reflective AR Glass 3mm
- Anti Reflective AR Glass 6mm Vandal-Resistance
- Anti Reflective AR Glass 8mm Vandal-Resistance
- Anti Glare AG Glass 3mm