Zero Bezel Panel Mount, 7" LCD Monitor, 800 x 480 LED 400 nits, VGA input

Model: EPMW0700-i7-F

FEATURES:

- Modularize mechanical design provides flexible product configuration and easy maintenance
- Optional build-in touch screen for interactive application
- Intel® Core i7 Processors
- Intel® 8th Gen (Whiskey lake-U)
- Supports Dual Channel DDR4 SO-DIMM 2400 MHz, up to 32GB
- 2 x Display Port, 4 x USB, 2 x LAN

SPECIFICATIONS:

Panel	Cell Type / Glass Surface	TFT LCD / Black Anti-Glare, low reflection coating
	Aspect Ratio / Size	Wide / 7" viewable diagonal area
	Active Area / Pixel Pitch	152.40(H) x 91.44(V) mm / 0.1905(H) x 0.1905(V) mm
	Native Resolution / Colors	800(H) x 480(V) / 262 K
	Brightness / Contrast	400 cd/m^2 (typ) / 500 : 1
	Response Time	< 30 ms
	Viewing Angle (typical)	H. 130° (- 65° ~ + 65°) , V. 110° (- 60° ~ + 50°)
	Light Source	LED backlight, Long life, 35,000 hrs (typ)
System	CPU	Intel® Core i3 / i5 / i7 Processors
	BIOS	Intel® 8th Gen (Whiskey lake-U) Core™ MCP Processors
	System / Graphic Chipset	SoC
	System Memory	Supports Dual Channel DDR4 SO-DIMM 2400 MHz, up to 32GB
	HDD	2 x SATA
	I/O port	2 x Display port
		4 x USB 3.0
		2 x LAN
		1 x Power
	Expansion	N/A
Power	Power Input	12V DC-IN (Lockable connector)
	Power Consumption	44.625 Watt, <1 Watt
Operating Condition	Temperature / Humidity	0ºC ~ 50ºC (32ºF ~ 122ºF) , 10% ~ 90% (no condensation)
Dimensions	Physical	Please refer to Drawing
	Carton	W x H x D = TBD

Options	**Touch**	**Video / TV**	**Enhanced Panel**	**Others**
	Projected Capacitive	SV + AV	Panel with LED backlight	Digital Signage(Stand alone)
	Protected glass	SV + AV + AV_Looping	High brightness panel	Networking Digital Signage
		SV + AV + TV	Wide Temperature	Motion Sensor
			Sunlight Readable	Light Sensor
				Auto-Dimming

MECHANICAL DRAWING:

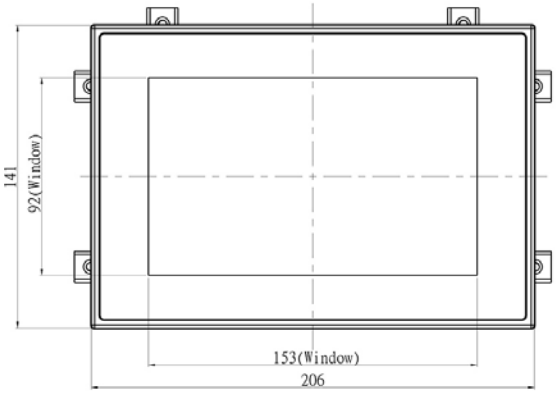

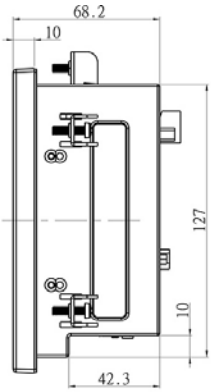

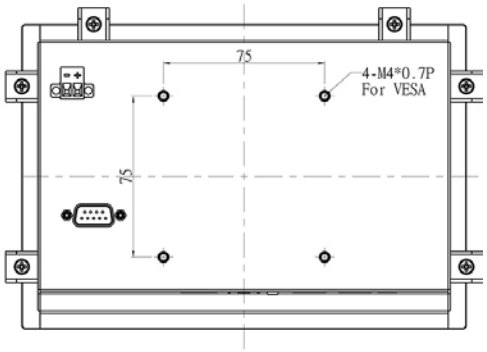

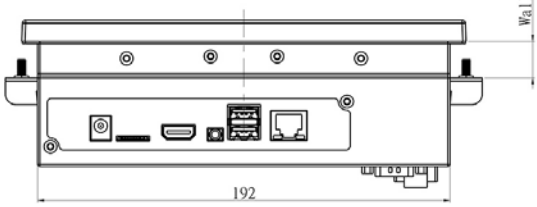

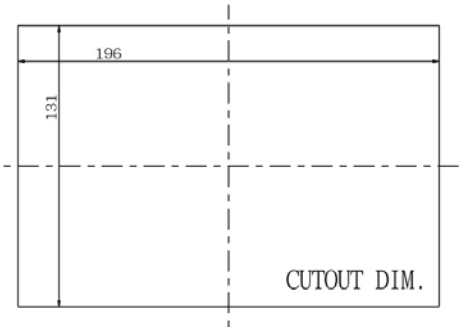

LCD OPTIONS:

LED Backlight Options
Introducing LED backlight options for monitors for energy efficiency and a brighter screen.

TouchScreen Options
Our LCD has a wide selection option to choose which touchscreen.technology suits for you.

	Four-Wire Resistive	Five-Wire Resistive	Pen Touch	Capacitive	Surface Wave(Saw)	Infrared Touch (Ir)
PRODUCT SIZE	1.7" - 24"	10.4" - 24"	15" – 19"	12" - 24"	10.4" - 30"	10.4" - 42"
TOUCH LIFE	1 – 2 million touches	30 – 35million touches	100 million touches	100 million touches	50 million touches	Long-term reliability
SCRATCH RESISTANCE	Hard Coated	Hard Coated	Hard Coated (SiO^2)	Hard Coated (SiO^2)	Glass Overlay Moh's hardness rating of 7	Glass Overlay Moh's hardness rating of 7
CONTAMINANT RESISTANCE	Resists moisture, dirt, vinegar, ammonia based food products and cleansers	Resists moisture, dirt, vinegar, ammonia based food products and cleansers	Resists moisture, dirt, vinegar, ammonia based food products and cleansers	Resists moisture, dirt, vinegar, ammonia based food products and cleansers	Resists moisture, dirt, vinegar, ammonia based food products and cleansers	Resists moisture, dirt, vinegar, ammonia based food products and cleansers
INPUT METHOD	Finger, Gloved Hand, Stylus	Finger, Gloved Hand, Stylus	Stylus Pen	Finger	Finger, Gloved Hand, Soft pliable stylus	Finger, Gloved Hand, Stylus
CONTROLLER	USB, RS232	USB, RS232	USB, RS232	USB, RS232	USB, RS232	USB, RS232

VIDEO Input Options:
For Video inputs options:

DVI, DVI+HDMI, SVideo+AV, SVideo+AV+DVI, AV+Looping, DVI+AV+Looping, HD-SDI, BNC(PAL/NTSC)

Optical Bonding Options
- Optical Bonding provides the best reduction of ambient light washout of any commercially available enhancement technology.
- Optical Bonding has a lower cost than most other competing technologies.
- Optical Bonding offers superior ruggedization, enhancing the display durability under vibration, shock and other environmental extremes.

RS-232 Remote Control Options
Remote Control Protocol: Command Code to set system

9-36V DC Input Options
iTech offers a selection of DC input from 9V to 36V

Light Sensor and Motion Sensor Options
iTech LCD offers Light and Motion Sensor

Privacy Filter
Front Glass Options:
- Anti Reflective AR Glass 3mm
- Anti Reflective AR Glass 6mm Vandal-Resistance
- Anti Reflective AR Glass 8mm Vandal-Resistance
- Anti Glare AG Glass 3mm