Parts List					
ITEM	QTY	DESCRIPTION	PART #	REV	DWG/MFR
1	1	Button, DOD Series Button Boot	004008	1.0	DOD-01-MBR
2	1	Video Receptical 19pin DBPE	110864	B	RGBP-99-IC1
3	1	PCB, DOD Power-Touch-USB PCB	900407	D	J0307.10

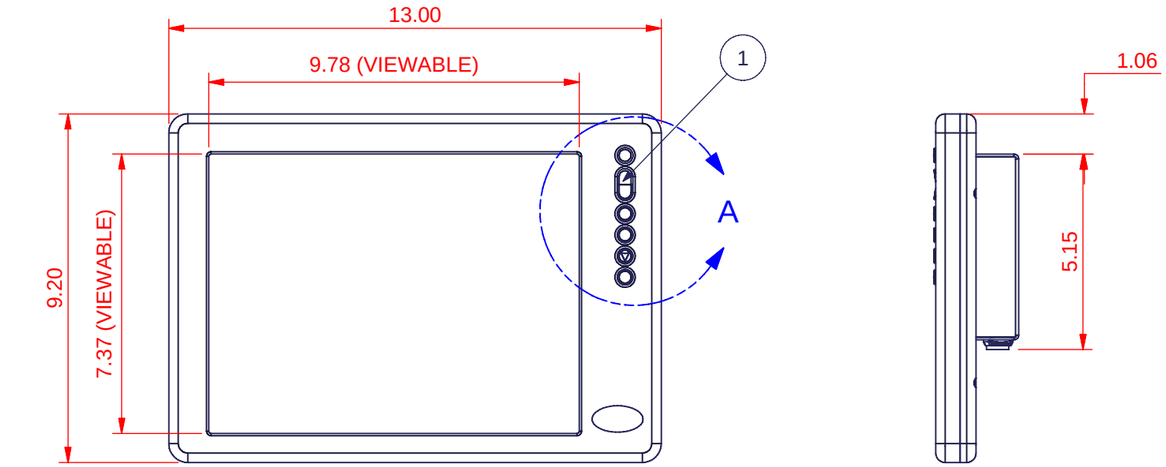

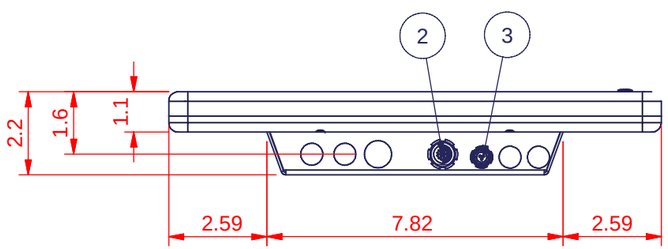

POWER CONSUMPTION
MIN = 6 watts
MAX = 20 watts

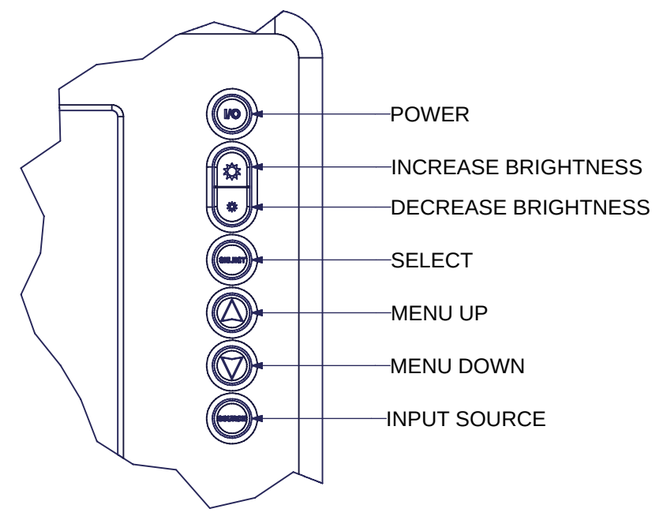

DETAIL A

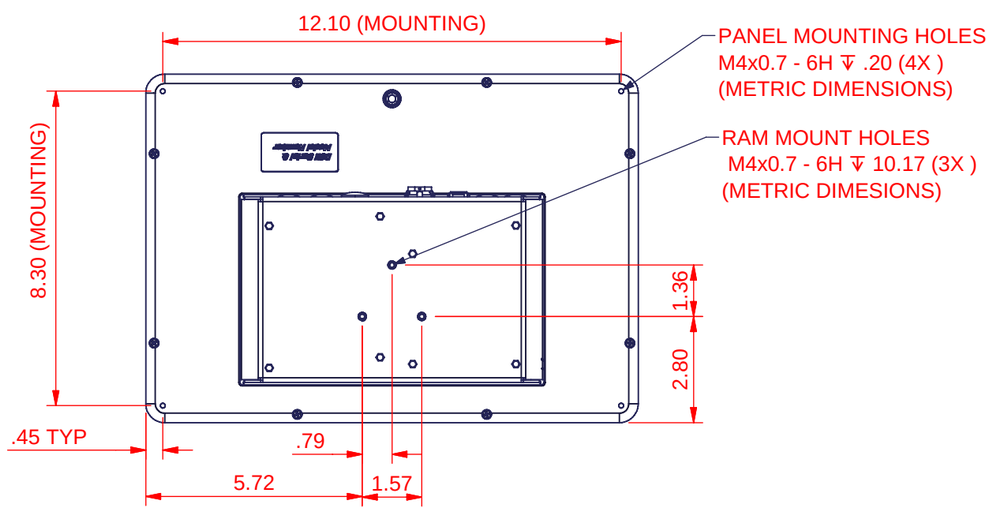

VIDEO - PLUG 19 PIN

Pin	*Signal*	*Gauge*	*Pairs*
1	RED	28	1A
6	R-GND	28	1B
2	GREEN	28	2A
7	G-GND	28	2B
3	BLUE	28	3A
8	B-GND	28	3B
4	ID2	28	4A
11	ID0	28	4B
5	V-GND	28	5A
14	V-SYNC	28	5B
12	ID1-DA	28	6A
16	ID3-CLK	28	6B
13	HSYNC	28	7A
10	H-GND	28	7B

POWER CONNECTOR

PIN	*SIGNAL*
1	VDC
2	NC
3	GND

TOLERANCES
LINEAR: .X = ±.1, .XX = ±.01, .XXX = ±.005
ANGULAR: ±1°
UNLESS OTHERWISE SPECIFIED

Project: **DOD1200R**
Design: EC Date: 11/13/2003
Check: MG Date: 5/29/07

Part # DOD1200R
Wgt.: 5.41 lbmass ± .25lbs.
Material:
Finish: Black Annodize
P:\AWM\AWM12-UNV\Assemblies\Display,DOD1200R (Standard).iam

Dwg # D1707.10
Rev # **1.0**

OVERVIEW
Display, DOD1200R (Standard)

Sheet 1 of 1

i-TECH COMPANY
TOLL FREE: (888) 483-2418
EMAIL: info@itechlcd.com
WEB: www.iTechLCD.com